Prokorment
VERTROUWEN IN PRAKTIJK

Indu Sol
Industrial Solutions

Indu-Sol GmbH – Specialist in Industrial Networks

PROFIBUS

Rediscover proven technology

Products

Diagnosis

Monitoring

Training

Consulting

PROFI BUS®

Notes

Content

Basics (What is PROFIBUS?) 4
Standards and guidelines 5
PROFIBUS tester PB-Q^ONE 6
PROFtest II XL cable tester 7
PROFIBUS measuring points 8
PROFIBUS-INspektor® NT analysis and diagnostic tool 10
EMCheck® LSMZ I leakage current measuring clamp 13
PROFIBUS Diagnostic Set 13
PROmanage® NT network monitoring software 14
Configuration example (permanent network monitoring) 16
Distributed data logging 17
Compact INspektor® – PROFIBUS-INspektor® NT 18
Modular INspektor® – INBLOX® 18
From the modular INspektor® to the repeater (INBLOX®) 19
INBLOX® module versions 20
What is a repeater and what is it used for? 22
Repeater product range MULTIrep (X2, X5, X7) 23
Modular repeater – INBLOX® 24
Compact repeater REpeato® 24
PROFIBUS services 25

Product overview

PROFIBUS measurement and diagnostic tools 26
PROFIBUS measuring points 27
Permanent network monitoring 28
Repeater 30
EMC (analysis/diagnosis/measurement) 30
PROFIBUS cable 31
PROFIBUS tools and accessoires 31
PROFIBUS connectors 32
PROFIBUS measurement / training 34

What is PROFIBUS?

Basics

PROFIBUS is a long-established fieldbus for connecting sensors and actuators with a central controller. It has proven to be a reliable and safe network technology. As a market-leading, standardised system, it enables the joint operation of automation and visualisation systems without a need for special interfaces. PROFIBUS is suitable both for smaller applications where time is critical and for highly complex communication tasks.

In order to ensure the stable functioning of any machine or system in the long term, the condition of all parts that are subject to wear needs to be monitored. Besides mechanical parts, this also includes the entire communication network with all its components.

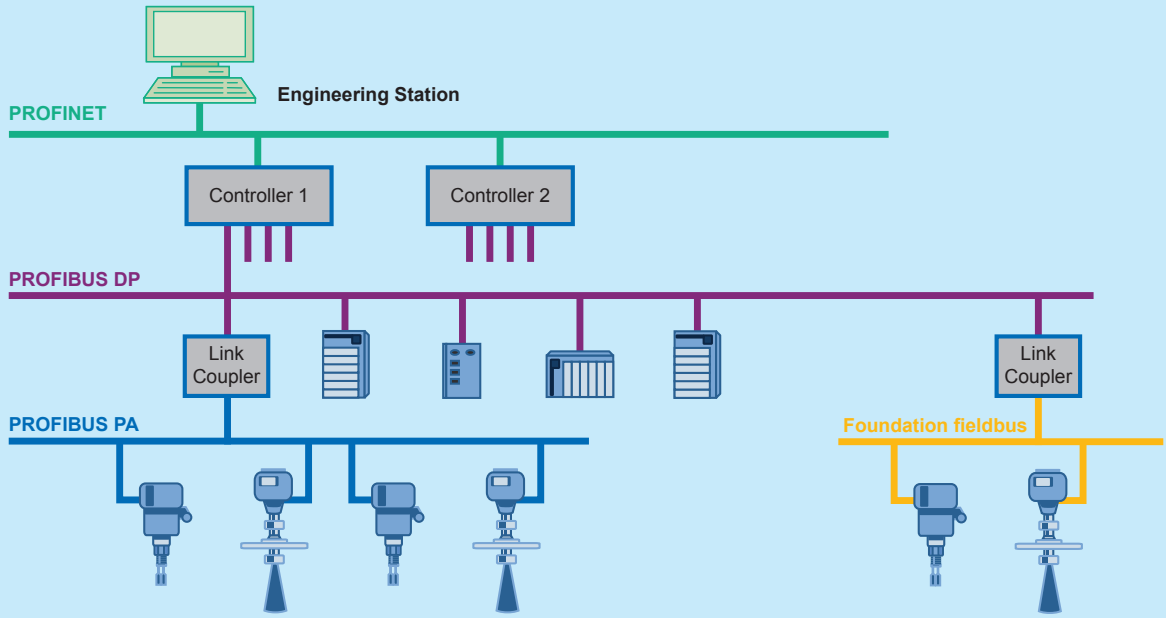

Fig. 1: Schematic representation PROFIBUS

Permanent network monitoring

In the very near future, the challenges inherent to an increasingly higher degree of automation in production processes will be manageable only with a system solution for permanent network monitoring with the design goal of sending a warning before a failure occurs. Continuous monitoring of the fieldbus provides information about the current and past condition of a system to make maintenance plannable. This in turn ensures uninterrupted production without serious losses.

Passive data logger

The passive data logger checks PROFIBUS for typical quality parameters like error and repetitive telegrams, device diagnostics and device failures. These events are detected and stored in the device by means of preset trigger functions. The collected network data can be accessed via an integrated web interface for condition-based maintenance. A topology map stored in the device allows for the location of recorded events to be pinpointed to a specific segment and device.

Network monitoring software

A central network monitoring application aggregates the information of the distributed data logger in one location. This allows operators and maintainers of machines and systems to obtain all necessary information about the network condition at any time and receive warnings in case of anomalies.

Standards and guidelines

Measurement, planning, acceptance inspection and commissioning in PROFIBUS, and therefore the criteria for quality evaluation, are based on observing the following standards and guidelines as well as the experience of **Indu-Sol GmbH**.

- PI PROFIBUS Design Guideline – Version 1.13 – May 2015
- PI PROFIBUS Commissioning Guideline – Version 1.0.9 – May 2015
- PI PROFIBUS Assembly Guideline – Version 1.14 – May 2015
- EN 50310 – Application of equipotential bonding and earthing in buildings with information technology equipment
- VDI / VDE Guideline 2184 – Reliable operation and maintenance of fieldbus systems
- Functional grounding and shielding of PROFIBUS and PROFINET

Maintenance and troubleshooting

When the permanent network monitoring system detects a deterioration in the condition of the PROFIBUS, the collected information enables the error to be localised precisely and corrected during planned maintenance.

All parameters that are important for the transmission quality can be checked with special diagnostic tools and brought back into the acceptable range with targeted measures.

The most common cause for changes in fieldbus installations is planned or unplanned intervention during maintenance or assembly work, as well as slow wear of component electronics and PROFIBUS cabling.

Quality tester

The quality tester is a universal diagnostic tool for online evaluation of the physical and logical communication quality of the data exchange in PROFIBUS networks. It provides comprehensive functionality for a quick and easy inspection of the entire network and does not require in-depth understanding of the signal shape or PROFIBUS data transmission.

Cable tester

The cable tester is used to check if the cables in a PROFIBUS network are routed correctly. The device indicates the real cable length and detects cable and shielding discontinuities as well as wiring errors.

Passing a cable test is the prerequisite for clean signal transmission in a PROFIBUS network.

The cable test is performed with the system turned off. It is easy to use and has an easy to read clear-text display.

RECOMMENDATION – Quality values

Recommendations on the quality values in PROFIBUS by **Indu-Sol**

Telegram repetition (unanswered calls/resending a call telegram)	0
Error telegrams (defective telegrams)	0
Quality value (quality of signal transmission)	≥ 2500
Segment length (maximum length per segment)	baud rates depending
Cable impedance (AC wave resistance of a PROFIBUS cable)	150Ω±15%

PROFIBUS • PROFINET

PROFIBUS tester PB-Q^{ONE}

PB-Q^{ONE}

The **PROFIBUS tester PB-Q^{ONE}** is a measuring and diagnostic tool that was developed especially for commissioning and factory acceptance tests, maintenance and service as well as troubleshooting in PROFIBUS networks. Its ease of use and clear and automated evaluation of measuring results allow to reliably evaluate the state of the physical and logical transmission quality in the network.

Overall Rating		
	Measuring Point	
	Measured	2 of 2
	Measurement at measuring point	**SPS Hauptschrank (Address: 5)**
	Date	30/08/2017
	Timestamp	09:48:35
	Duration	0:00:37.88
Bus Physics		
	Quality values	
	Worst Value	4102
	Best Value	5551
	Critical Quality Value	2,500
	Number of nodes below critical quality value	0
	Number of unmeasured nodes (timeout)	0
Bus Communication		
	Protocol Analysis	
	Baud Rate	1.5 Mbit/s
	Bus Cycle Time (min/max)	1.40 ms / 1.85 ms
	Received frames	184634
	Sent frames	184634

Fig. 2: **Excerpt telegram analysis diagnostic function**

Physical evaluation

With the **PROFIBUS tester PB-Q^{ONE}** measuring the transmission levels of the slaves in operation can be physically evaluated and displayed by a measurement bar chart for each slave. Each bar is a representation of the bit shape that results from the evaluation of the e rising edges, differential voltage and the transient response of the signal for each device. This evaluation now also takes into account the 7V drivers of modern PROFIBUS devices.

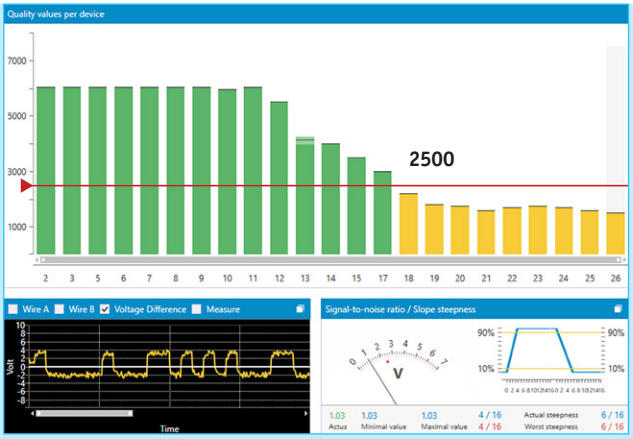

Fig. 3: Quality values

Highlights

- Ease of use, well-structured handling
- Complete physical and logical analysis
- Simplified topology illustration with measuring site management
- Well-structured, editable report to process further in *.pdf or *.doc format
- Measuring results within seconds
- Simple evaluation through traffic light function
- Full-featured telegram monitor

PB-Q^{ONE}

Logical evaluation

The analysis of the telegram traffic provides information about the communication quality of the network and indicates critical events including a clear text diagnosis of each device. Triggering for specific results is also possible to detect and analyse intermittent errors.

Topology scan

The topological order of all devices is determined without annoying shutdowns of the network. The result of this scan is automatically combined in a single and compactly topology, including all repeaters.

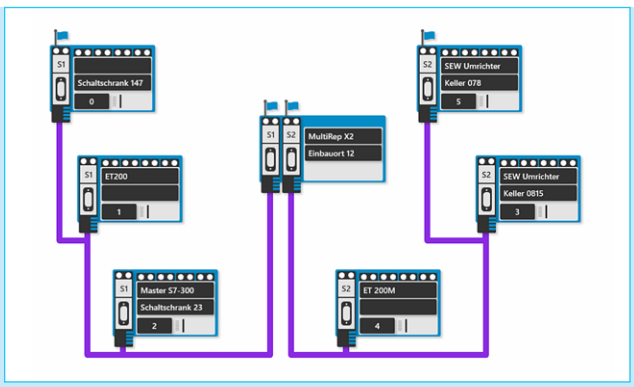

Fig. 4: Topology scan

PROFtest II XL cable tester

PROFtest II XL

The **PROFtest II** cable tester is used to check if the cables in a PROFIBUS network are routed correctly. The device indicates the real cable length and detects cable and shielding discontinuities as well as wiring errors. The cable test is done while the system is turned off and supports installers and maintainers with commissioning and service.

The test is performed in several steps, each from both ends of the segment. All results are stored on the device and can be printed out via a PC as a log.

Operating steps

1. Test without termination
2. Test with 1x bus connection
3. Test with 2x bus connection

Testing criteria

The following tests are carried out when performing the individual operating steps:

- Display of actual cable length
- Cable impedance measurement
- Correct termination
- Cable discontinuity
- Shielding discontinuity
- Swapped cables A.B
- Cable short A-B
- Shielding short for cables A/B
- Use of improper cable types
- Determining reflections

The test is always done from both ends of the relevant segment (see page 8).

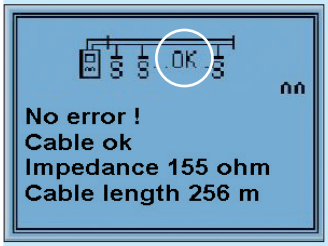

Fig. 5: No errors found

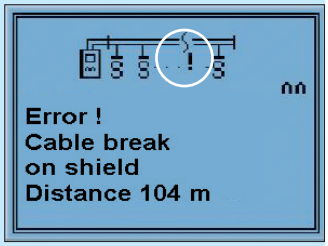

Fig. 6: Errors found

Highlights

- Is the ideal measurement tool for commissioning operation, maintenance and service.
- A simply and handy tool for the verification of the correct wiring in PROFIBUS networks with RS 485 technology.
- Featured through simply handling and a significant text indicator on the display.
- The cable-test will be taken basically offline and shows the avoidable weak spot in meter distance on the display.

Logging

All results of each step are stored on the device and can be printed out via a PC as a log.

Machine	: area 1
Name	: segment 2
Own profibus adress	: 001
Number of profibus connectors in the segment	: 013
Number of profibus devices in the segment	: 014
Baud rate	: 1.5 Mbaud
Slot time	: 000300
Date	: 08\03\01
Time	: 10:54:21

Analysis result for test without termination

No error!

Irregulary A <-> B not determinable
Irregulary A <-> shield not determinable
Irregulary B <-> shield not determinable
Breakout or impedance change not determinable
Cable break not determinable
Cable OK
Impedance approx. 145 ohm
Cable length approx. 159m

PROFtest II XL (including all accessories in the suitcase)

PROFtest II XL

PROFIBUS measuring points

Why measuring points in the PROFIBUS network?

Feedback-free measuring points to connect essential diagnostic tools are indispensable for communication analysis during commissioning, maintenance or troubleshooting.

A measuring point is a defined point of access to a system where the communication can be tested. This allows you to access the machines and systems at any time, even during running production.

Diagnostic access should already be considered during the planning stage of a PROFIBUS network.

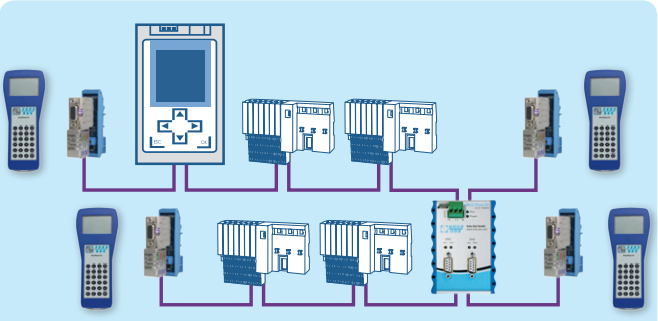

Fig. 7: Measuring points at the beginning and end of each segment

Where should measuring points be installed?

A PROFIBUS network is fundamentally based on a linear structure. If required, it can be subdivided into separate, galvanically isolated segments by means of repeaters or other transducers. In each of these segments, several devices are connected that access the same medium for their communication.

This makes it necessary for all devices to understand each other. In order to also check the transmission quality, it is necessary to perform measurements both at the beginning and the end of a segment. Measuring points therefore need to be installed both at the beginning and the end of a segment.

RECOMMENDATION

Diagnostic repeater

When using PROFIBUS components with a permanent terminator, e.g. connections DP2 and DP3 of a diagnostic repeater, then the measuring point cannot be installed immediately at the beginning of a segment.

In this case, the measuring points are looped into the network at a distance >1 m behind such a component.

Practical example

It's a common assumption that one measurement per segment is sufficient to determine the transmission quality. However, practice shows that measurements at the beginning and the end of each segment are required. Faults in a segment may have varying effects. A measurement at the beginning of a segment may indicate trouble-free communication (see fig. 8) while the measurement at the end of the same segment shows a very different result (see fig. 10).

Because of such experiences, it is very important to conduct measurements at both ends of a segment.

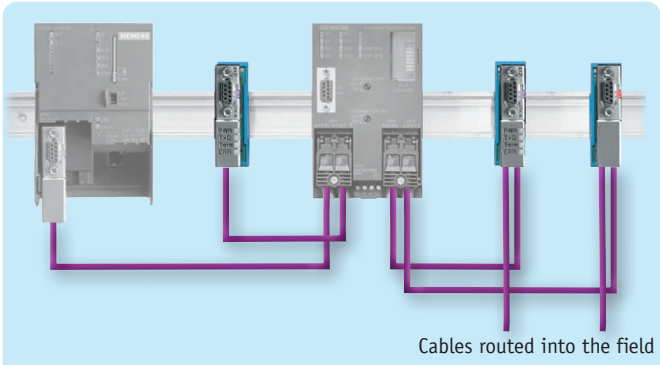

Fig. 9: Diagnostic repeater with three measuring points

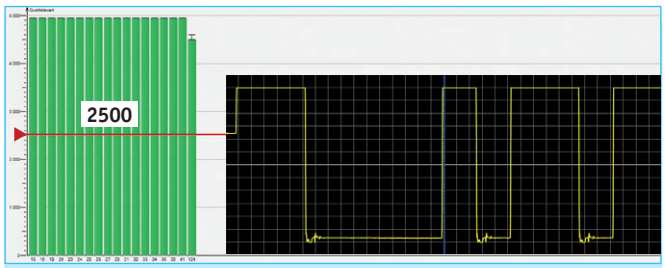

Fig. 8: Measurement segment start – good signal readings

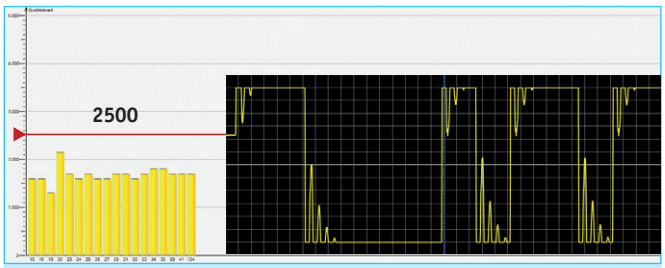

Fig. 10: Measurement segment end – weak signal values

PBMA IP20 — iPBMA IP20 — PBMS IP64 — PBMX IP67 — PAMA IP20 — PAMA IP67

A wide variety of PROFIBUS measuring points is available to cover all requirements. Depending on conditions and functionality, there is a choice between the following types of measuring point:

PROFIBUS DP

PBMA IP20
active measuring point

The **PBMA** PROFIBUS measuring adapter is a version of the measuring point designed for IP20. Diagnostic tools are connected with the PG/ diagnostic interface of the PROFIBUS connector.

iPBMA IP20
intelligent measuring point

In addition to functioning as a measuring point for cabinet installation, the **iPBMA** independently monitors all physical and logical parameters of a PROFIBUS network.

PBMS IP64
active measuring point

The **PBMS** measuring and programming interface for installation into the front of a cabinet or junction box creates simple, trouble-free and optimal access to the MPI or PROFIBUS interface on the inside.

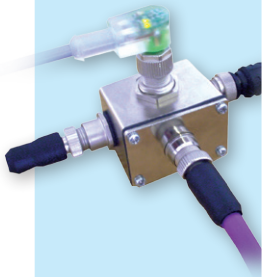

PBMX IP67
active measuring point

The **PBMX** version with IP67 protection is designed for installation in rough production environments without a protective housing. Diagnostic tools can be connected via the free M12 measurement jack.

PROFIBUS PA

PAMA IP20
passive measuring point

The passive PROFIBUS PA measuring point **PAMA** IP20 can be used both to check the physical and logical transmission quality and for determining the actual supply current without feedback.

PAMA IP67
passive measuring point

The **PAMA** version with IP67 protection is designed for installation in rough production environments without a protective housing. Diagnostic tools can be connected via the free M12 measurement jack.

PROFIBUS-INspektor® NT analysis and diagnostic tool

The **PROFIBUS-INspektor® NT** has all you need for your PROFIBUS systems to safely make it to "retirement age".

The **PROFIBUS-INspektor® NT** diagnostic device captures your PROFIBUS network with all active devices and displays them clearly in the integrated web interface. As a passive data logger, it monitors the logical data traffic and alerts you of any anomalies when they occur – not after the system has failed.
The **PROFIBUS-INspektor® NT** allows for comprehensive on-line analysis of all quality-relevant events, such as:

- Error telegrams
- Telegram repetition
- Device failures
- Device diagnostic data
- Restarts
- Bus cycle times

Highlights

- History of all events for quick and easy overview
- Network life cycle and current bus condition at a glance
- Alarm options via switch contact, LED display, e-mail notifications or SNMP trap
- Topology with condition indicator for quick localisation of weaknesses in the PROFIBUS network
- Automatically generated test report with all the key event information

Reading out the data

No additional software is required to read out the data from the **PROFIBUS-INspektor® NT**.
All that is needed is an Internet browser (e.g. Internet Explorer) to display both the current network condition and a history of past events.

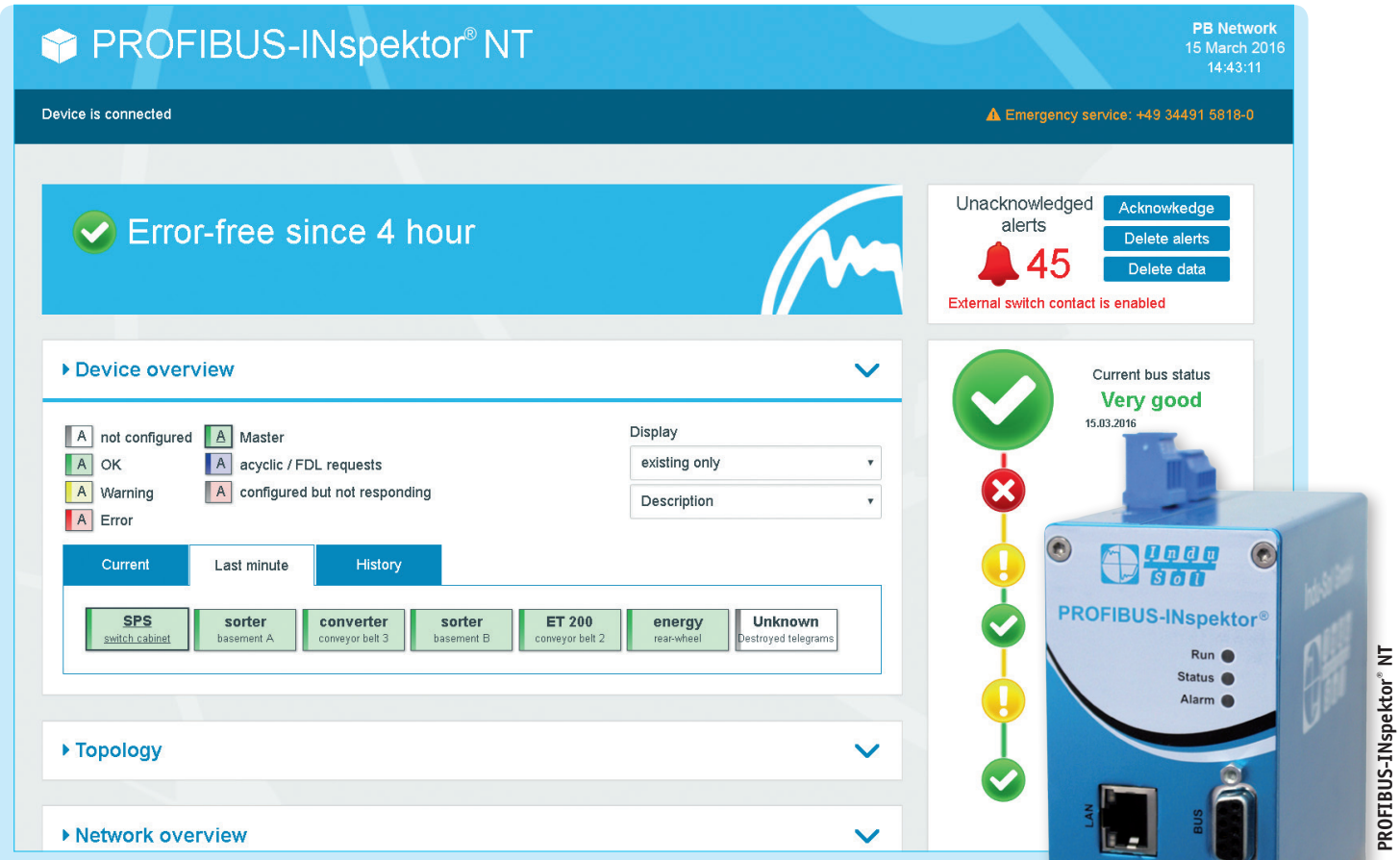

Fig. 11: Clear, detailed overview of the devices and history of the network condition

PROFIBUS-INspektor® NT

Topology

To evaluate a PROFIBUS network, knowledge of the actual wiring between the individual devices is a key prerequisite. This topology can be stored on the device with all important infrastructure components like repeaters, measuring points etc., as well as device information, and retrieved as needed.

In addition, the actual and past conditions of individual devices are shown in colour. This makes it much quicker and easier to identify potentially suspect segments or devices much.

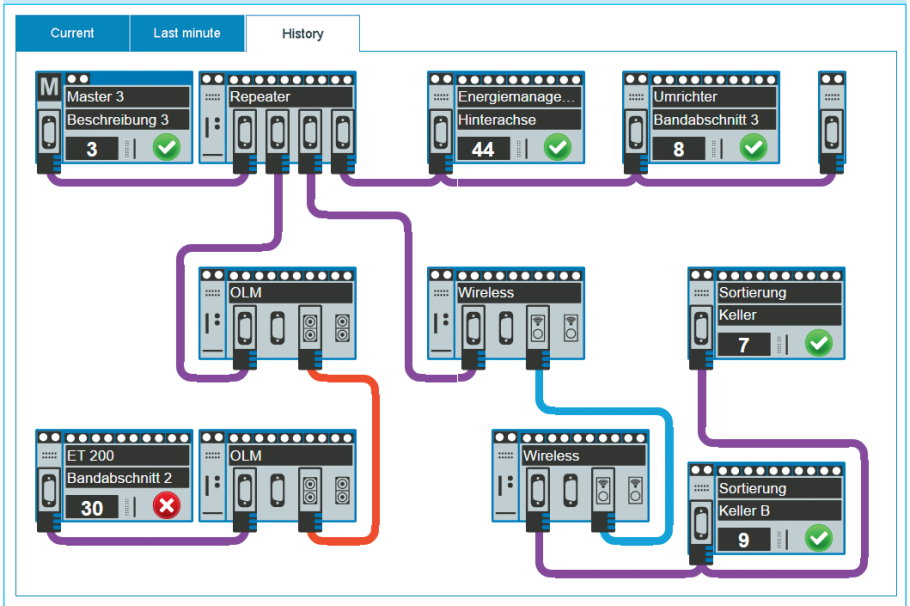

Fig. 12: Clear topology overview of individual devices and their condition

Error statistics

You can see clearly which device is most frequently concerned in the events that occurred (e.g. telegram repetition). This provides important information for troubleshooting.

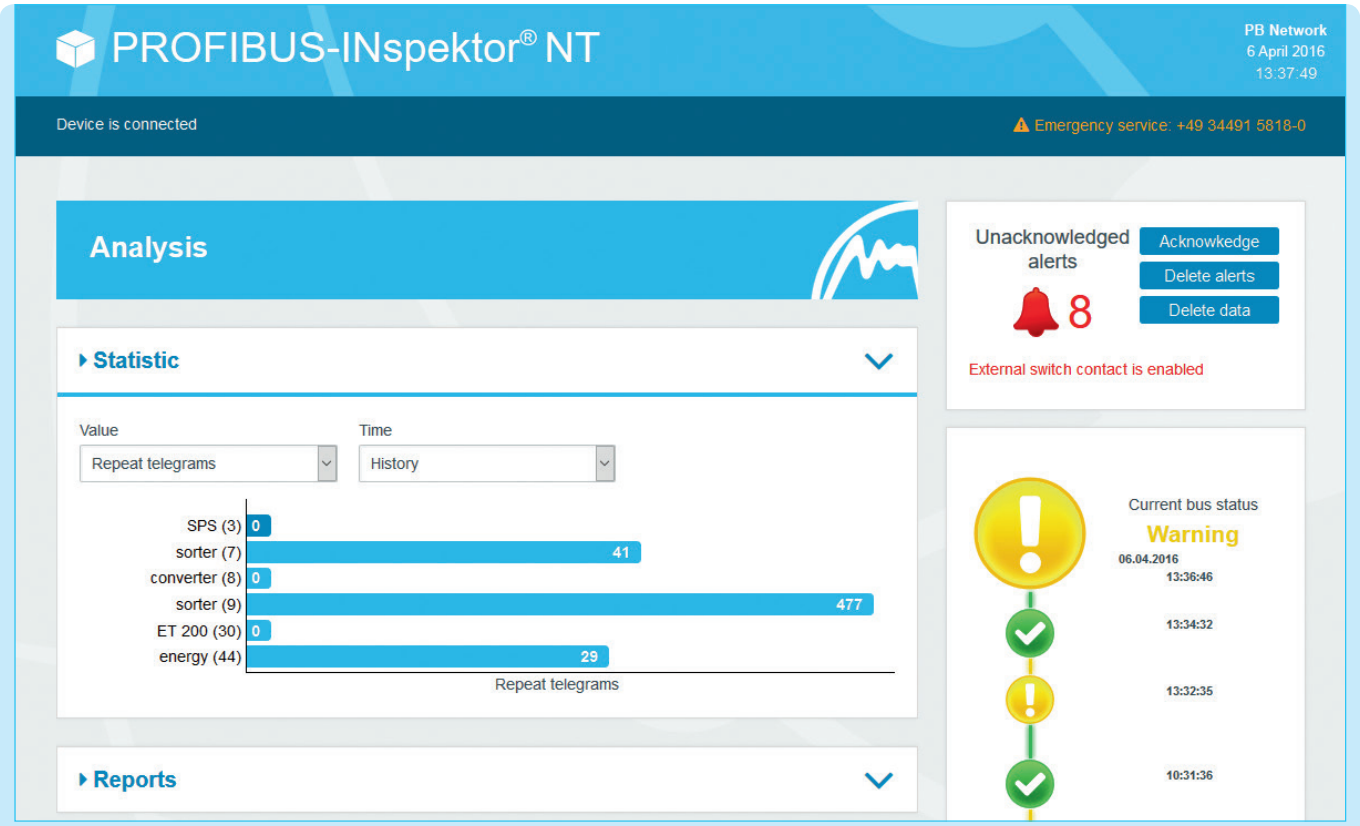

Fig. 13: Error statistics for individual devices in a clear overview

PROFIBUS-INspektor® NT analysis and diagnostic tool

PB-INspektor® NT

Alarms

As soon as a threshold is exceeded, the **PROFIBUS-INspektor® NT** creates an alarm to warn the operator in time to perform targeted, planned maintenance.

Fig. 14: Comprehensive alarm management

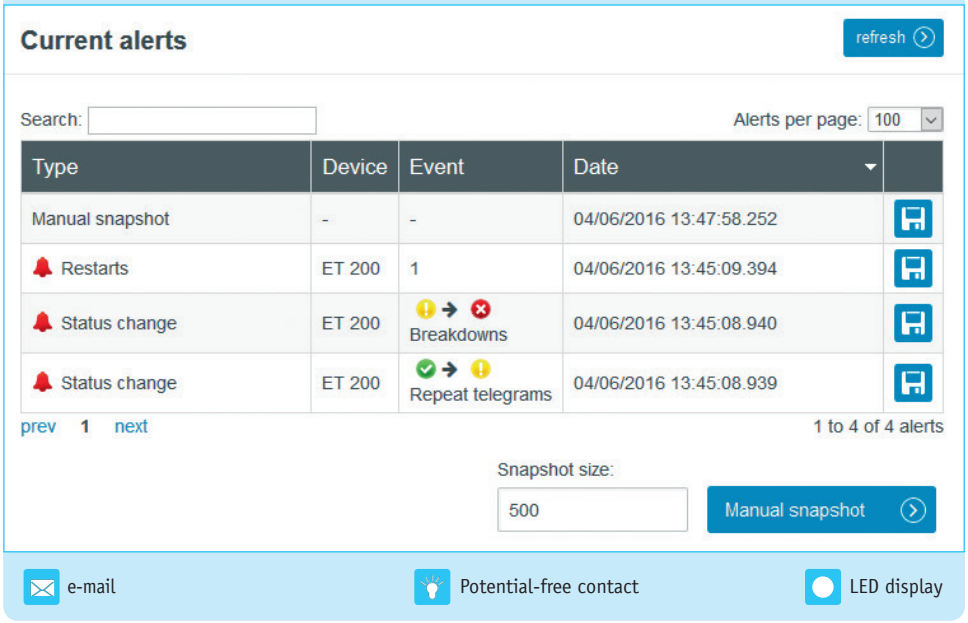

Warnings can be given in several ways. An LED on the **INspektor®** shows directly whether errors occurred in the network. In addition to this warning, a potential-free contact can be switched, e.g. to send a message directly to the control system. The third option is to send an e-mail to notify the responsible maintenance team as soon as possible. The alarm list on the web interface of the **PROFIBUS-INspektor® NT** shows which error occurred on which device at what time and what type of event (threshold) was the trigger. The memory space is sufficient for up to 2000 alarms. Each alarm has a snapshot with up to 1000 telegrams.

Acceptance log

The **PROFIBUS-INspektor® NT** is able to create a complete acceptance log with only a few clicks.

Fig. 15: Clear overview of all important information. This includes all system information (e.g. records of EMC conditions in the bus environment).

EmCheck® LSMZ I leakage current measuring clamp

EmCheck® LSMZ I

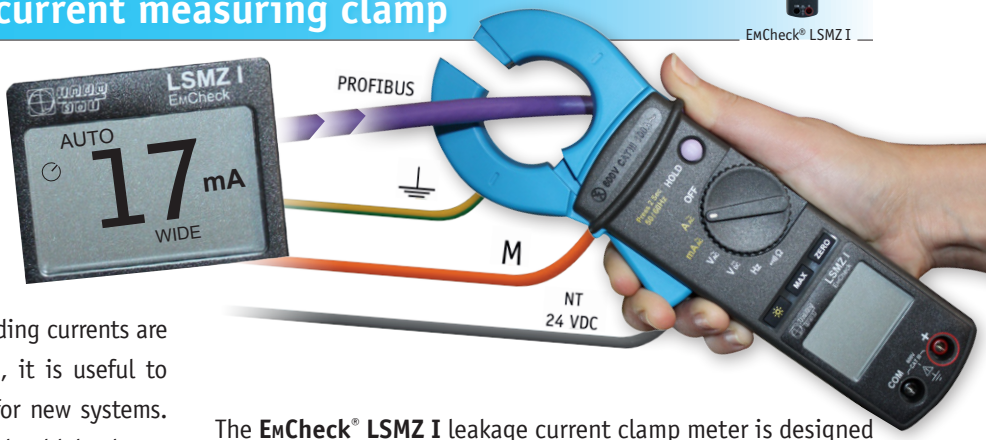

Ever more often, compensating currents caused by high-frequency shielding currents create intermittent faults in industrial data communication systems. On one hand, these currents may disturb the transmission itself. On the other, they may damage the devices by overloading. Because such effects of high shielding currents are only noticeable after a some time has passed, it is useful to define limits and document compliance even for new systems. Shielding currents during running operation should be lower than 40 mA.

RECOMMENDATION

Independently of the system specification, experiences at Indu-Sol show that shielding currents of < 40 mA can be tolerated. The decision of what is acceptable should always be made in the context of the frequency range in order to be able to perform suitable measures to reduce shielding currents.

The **EmCheck® LSMZ I** leakage current clamp meter is designed specifically to measure leakage and shielding currents in the frequency range of 50/60 Hz or 5 Hz - 1 kHz. The adjustable measurement range can be set between 30 µA and 100 A. For measuring shielding currents on a data cable, the lower end of the range is more relevant. The **EmCheck® LSMZ I** leakage current clamp meter is also an ideal tool to find insulation faults and unplanned shutdowns caused by leakage currents and tripped FI switches. It also offers all the features of a multimeter clamp. To determine loop impedances, the **EmCheck® MWMZ II** loop impedance measurement clamp (see page 30) can be used.

EmCheck® LSMZ I

PROFIBUS Diagnostic Set

PB Diagnostic Set

PROFIBUS Diagnostic Set

Highlights

- Cable and impedance tester: **PROFtest II XL**
- Online network diagnostics: **PROFIBUS-INspektor® NT**
- Leakage current measuring clamp: **EmCheck® LSMZ I**
- PROFIBUS tester: **PB-Q^{ONE}**

On request, we will provide you with an introduction to the functions, benefits, and uses of the complete contents of the **PROFIBUS Diagnostic Set** (see page 26). This introduction is especially suitable for those in charge of commissioning, service, and maintenance.

We will gladly provide a separate offer for individual devices. (see page 26 ff.)

PROFIBUS permanent network monitoring

PROmanage® NT network monitoring software

For preventative, condition-oriented maintenance of PROFINET networks **Indu-Sol** has developed a strategy for permanent network monitoring (referred to as PNM in the following). It provides for condition monitoring with the goal of **"warning before failure"**.

The concept of PNM requires the continuous analysis of a network through distributed, passive data logging using the **PROFIBUS-INspektor® NT**. Whenever a preset threshold value is exceeded, then this event is stored along with a time stamp. The **INspektor®** can be looped directly into the system or retrofitted with an active programming cable during running operation. Each PROFIBUS master system therefore requires an **INspektor®**. If more than two masters are present, then the **INBLOX®** system (see page 17 ff.) can also be used. With the aid of **PROmanage® NT**, all external **INspektors®** are integrated in the monitoring via the existing Ethernet network, and the network conditions are bundled centrally on a server.
Network-specific events are pre-processed by the **PROFIBUS-INspektor® NT** and provided, chronologically, by the **PROmanage® NT** network monitoring software for further processing and evaluation.

PROmanage® NT enables the assessment, analysis and long-term storage of condition data for your fieldbus and other industrial networks. For this purpose, **PROmanage® NT** retrieves the port statistics of manageable switches and the events in the distributed data loggers (**INspektors®**), evaluates them and displays them graphically.

This sophisticated method of analysis makes irregularities immediately apparent. When a value exceeds or falls below a configurable threshold value an alarm activates. The statistic function keeps data exact to the minute available up to one year. This means historical events can be opened up for viewing at any time for cause analysis, e.g. of sporadic failures.

Highlights

- Central monitoring of all fieldbuses and networks
- Avoid system failures
- Timely warning via OPC, SNMP trap or e-mail in case of irregularities
- Data exact to the minute available up to one year
- Quick installation
- Easy device set-up due to automatic and manual device scan

To improve system availability the following targets are set for a PNM system:

- Continuous monitoring of real communication
- Complete monitoring and detection of causes of network weaknesses
- Automatic alarms when negative developments occur
- Central overview of all networks

PROmanage® NT

PROmanage® NT

Network history

How is my network?

The network history provides a quick and clear overview of:

- The current network status
- How long a network has run without error
- When the last error occurred (with time stamp)

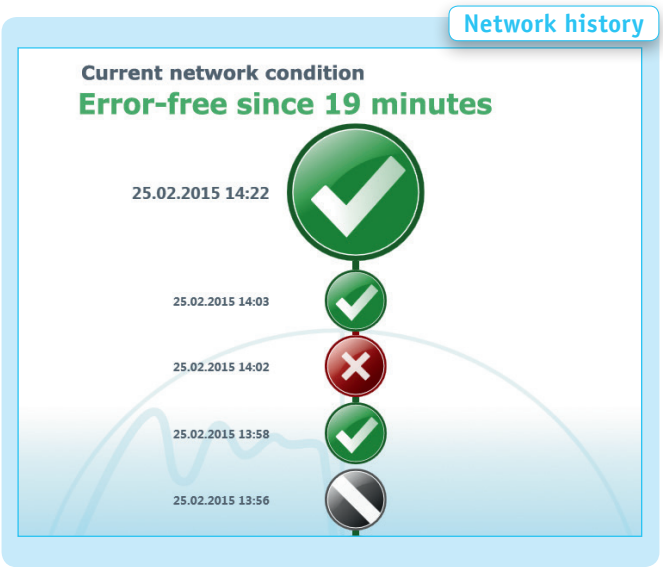

Network condition graph

A user-friendly interface can be used to display and evaluate the information. The interface can be adapted to your unique needs and spread over several physical screens for better overview.
Various parameters of different devices such as device temperature and failures can be compared in a graph to detect links in the event of malfunction.

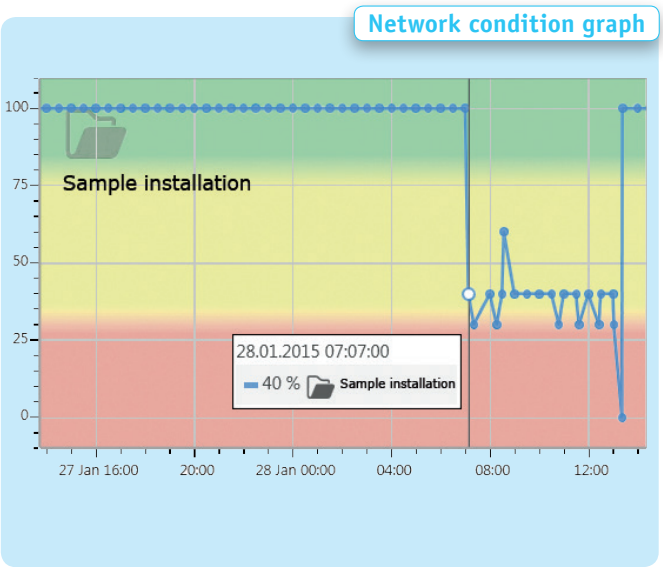

Event messages with time stamp

With the integrated threshold management threshold values can be defined for every network parameter. When a limit is reached an entry with a time stamp and event description is made automatically in the event list. Information about network errors can be retrieved from the event list with a mouse click.

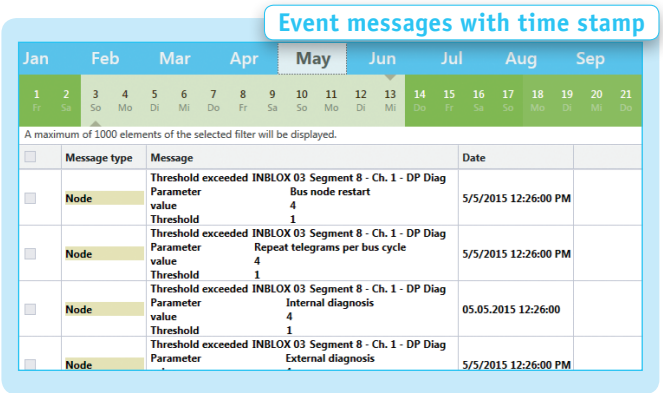

Alarm management

Integrated alarm management enables automatic forwarding of device notifications. By selecting suitable information medium (e-mail, message services, OPC, SNMP) all messages can be transmitted to the responsible persons in a timely fashion. This shortens notification paths and prevents undesired plant breakdowns.

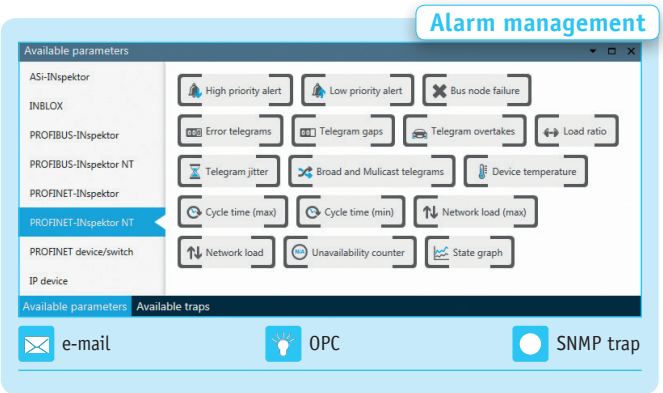

PROFIBUS permanent network monitoring

Configuration example (PNM)

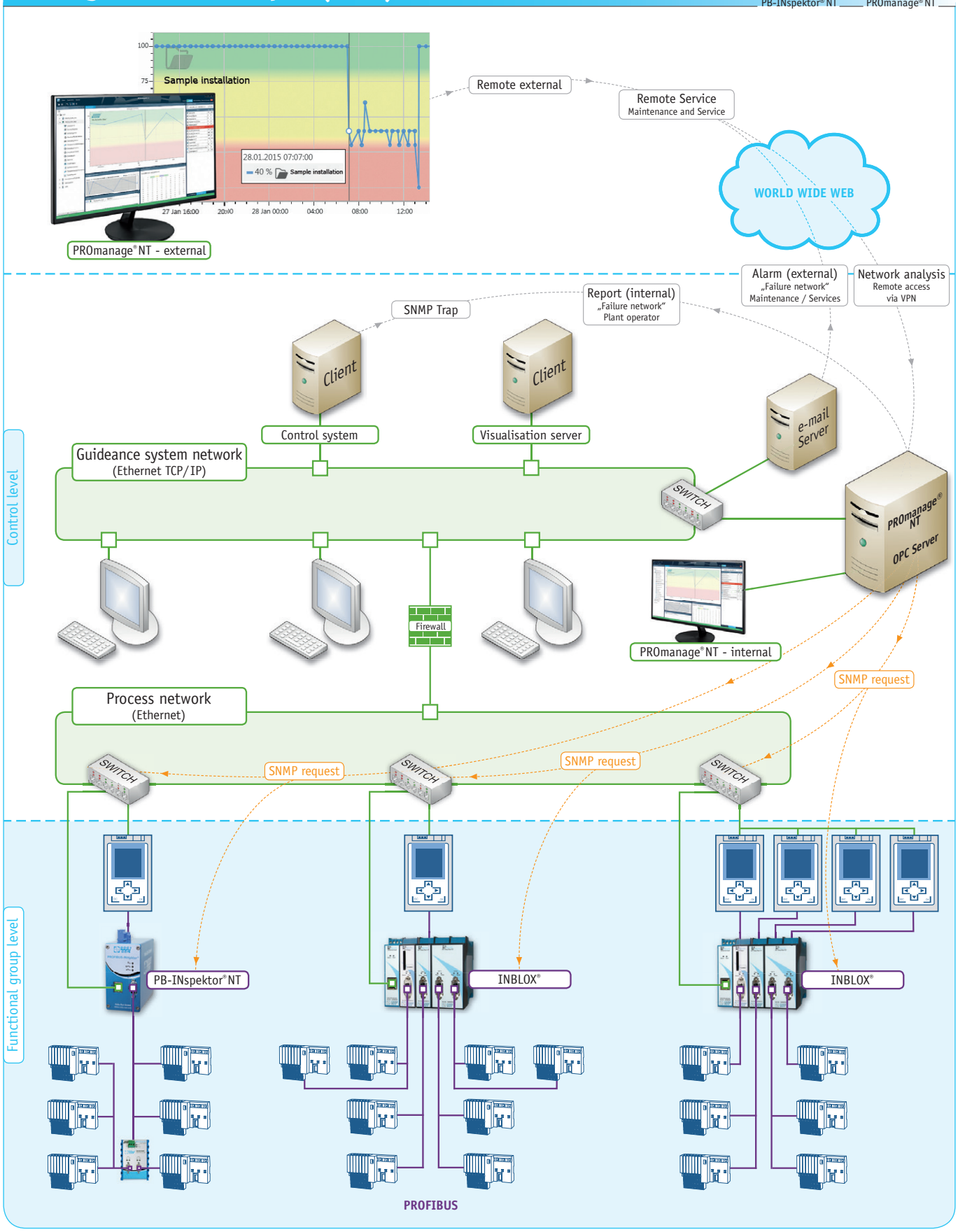

Distributed data logging

Data loggers record typical quality parameters such as error telegrams, telegram repetitions, device diagnostics and device failures in PROFIBUS networks. The collected network data can be accessed via an integrated web interface or recorded centrally with the **PROmanage® NT** network monitoring software.

Depending on the case and the scope of diagnosis, data can be collected using different methods, each with its own benefits. On one hand, there is the compact **PROFIBUS-INspektor® NT** data logger, which can be used to analyse one PROFIBUS network. On the other hand, there is the flexible **INBLOX®** system.

Compact data logger PROFIBUS-INspektor® NT

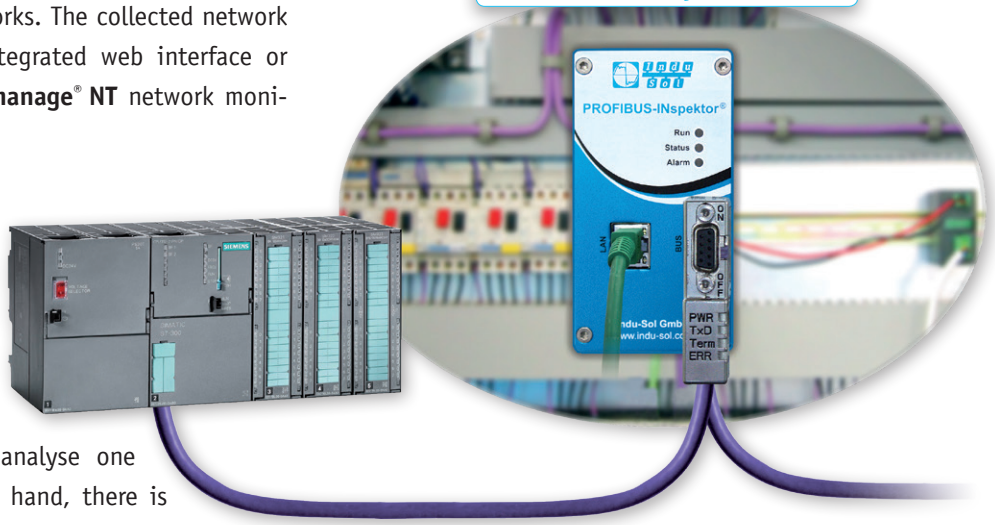

INBLOX® is a modular system that combines the repeater function with a continuous PROFIBUS analysis. Depending on the configuration, several PROFIBUS networks can be monitored with one system (modular **INspektor®**), or implement segment-based diagnostics with the repeater functionality (modular repeater).

Modular data logger INBLOX®

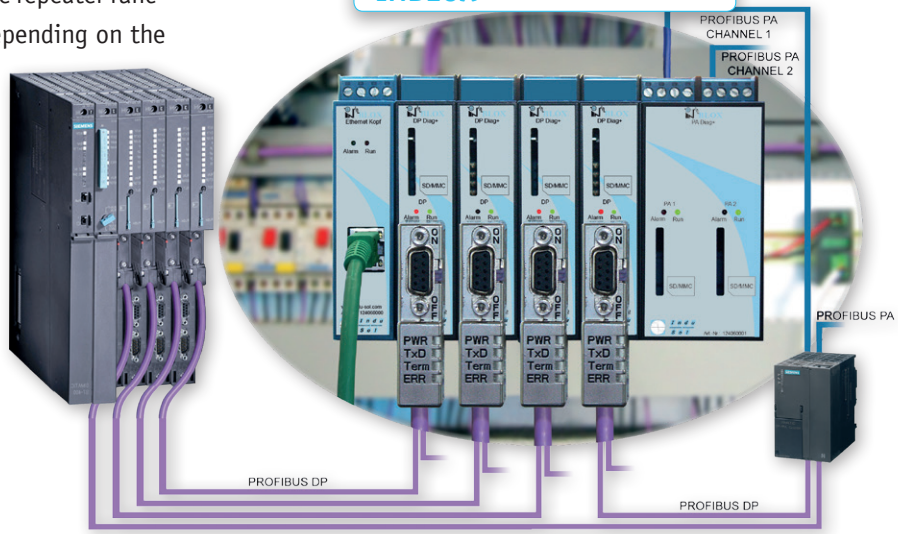

RECOMMENDATION

Logical evaluation LOG.

The analysis of the telegram traffic provides information about the number and type of device-specific telegram errors. Triggering for specific results is also possible to localise and analyse intermittent errors. Diagnostic telegrams are displayed in clear text to make evaluation easier.

RECOMMENDATION

Physical evaluation PHY.

The metrological evaluation of the signal shape is shown in bar graphs with Q values for each device. The quality should not be less than the preset limit of 2500 points. Each bar is a representation of the bit shape that results from the evaluation of the edges, the amplitude and the settling behaviour of the signal for each device. With the integrated oscilloscope function, problems with the signal shape or EMC as well as reflections can be diagnosed for each device.

PROFIBUS permanent network monitoring

Compact INspektor® – PROFIBUS-INspektor® NT

PB-INspektor® NT

PROFIBUS INspektor® NT

The compact **PROFIBUS-INspektor® NT** is the simplest solution for distributed data logging in PROFIBUS networks. This method can be implemented immediately without special configuration effort to capture all logical quality parameters in a network.

The compact version combines all necessary functions for diagnostics, alarms and reading of data in one device. This functionality allows the **INspektor®** to be used as a mobile device for acceptance and service (see page 10).

Modular INspektor® – INBLOX®

INBLOX®

Ethernet head module

Ethernet head module

The modular **INBLOX®** system offers multiple configuration options. Up to five expansion modules can be connected to the basic Ethernet head module. Each of these modules can provide different functions for network diagnostics.

In the version as a modular **INspektor®**, the **INBLOX®** system allows for simultaneous monitoring of up to ten networks. In addition to analysing PROFIBUS DP networks, expansion modules for PROFIBUS PA networks as well as a master module for parametrisation via FDT/DTM.

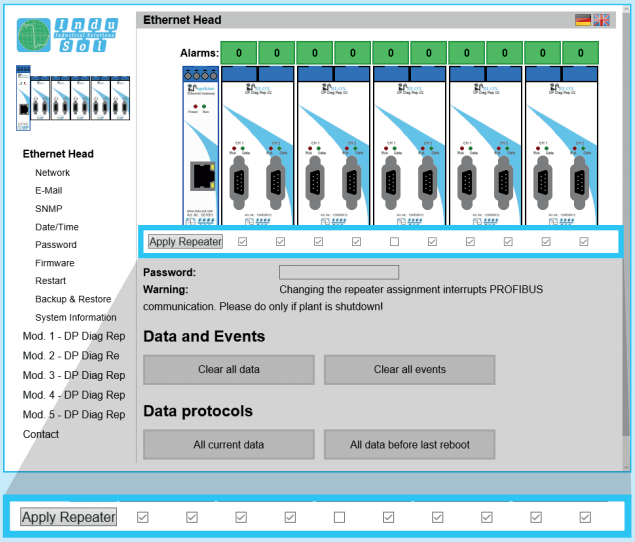

Fig. 16: Switching from INspektor® to repeater with a rear panel bus

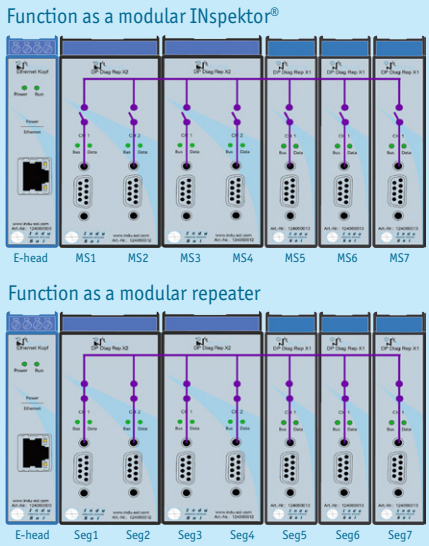

Fig. 17: Explanation of the rear panel bus

INBLOX®

From modular INspektor® to the repeater (INBLOX®)

Repeater function

In addition to providing distributed data logging, the **INBLOX®** system has a modular repeater function. In this version, the individual expansion modules can be linked via the repeater function to provide segment-based diagnostics.

The **DP Diag Rep X4** expansion modules provide monitoring of up to twenty PROFIBUS segments for logical quality parameters with only a single **INBLOX®** system. In addition to logical diagnostics, expansion with the **DP Diag+ Rep** modules also provides for permanent physical analysis of the signal shape.

By combining these three functions (logical and physical evaluation and repeater functionality), operators are always informed of the quality of each PROFIBUS segment. Periodical online measurements to evaluate the signal shape are a thing of the past.

Example modular repeater configuration

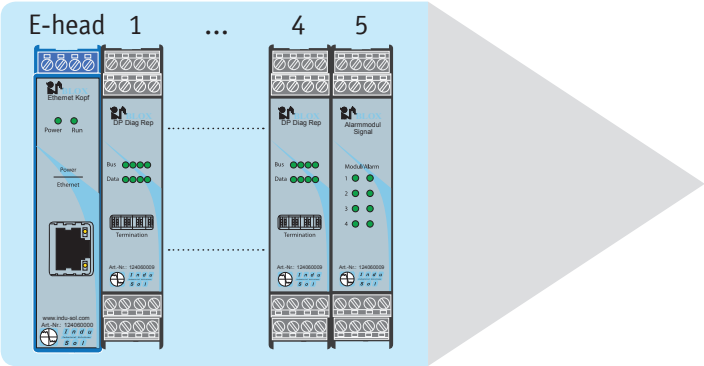

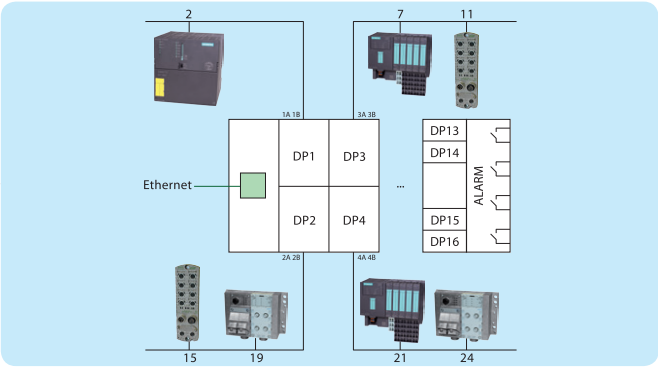

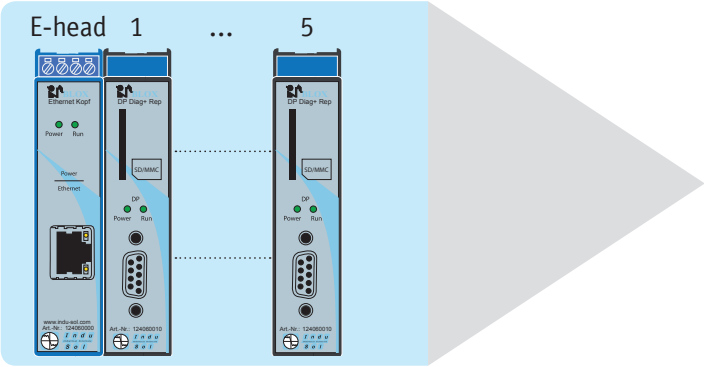

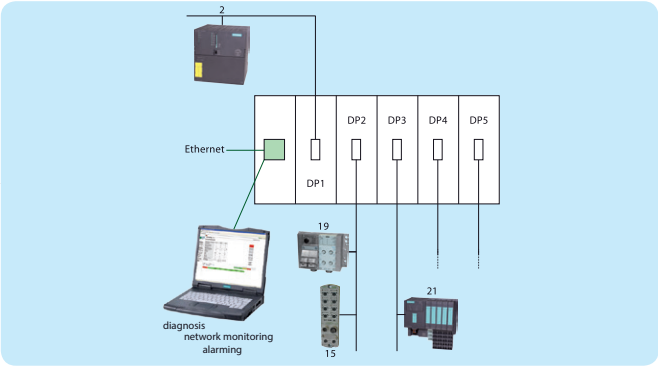

INBLOX® module versions

Identification for logical or physical analysis

DP Diag Rep X1 | DP Diag Rep X2 | DP Diag Rep X4 | DP Diag+ Rep | PA Diag+ | DP Diag Master | Alarm module

DP Diag Rep X1

DP Diag Rep X1

The **DP Diag Rep X1** expansion module is used to monitor the data communication in a PROFIBUS network for logical quality parameters. With additional expansion modules, several networks can be monitored in parallel. The integrated repeater function enables subdividing the network into individual segments.

DP Diag Rep X2

DP Diag Rep X2

The **DP Diag Rep X2** is used for logical network analysis at the two existing SUB-D interfaces. Depending on the setting, each interface be used to either monitor a separate PROFIBUS network or activate the repeater function. Up to ten master systems can be monitored in parallel with the **INBLOX®** system.

DP Diag Rep X4

DP Diag Rep X4

The **DP Diag Rep X4** expansion allows to run up to four galvanically isolated PROFIBUS segments – one per connection terminal – and perform a logical network analysis. Depending on the configuration, the module is able to either subdivide a network into four segments for monitoring as a modular **INspektor®**, or structure a network in up to twenty segments as a modular repeater.

DP Diag+ Rep

DP Diag+ Rep

In addition to logical network analysis, the **DP Diag+ Rep** expansion module offers a possibility to record all physical quality parameters. In addition to the device-specific physical quality value represented as a bar graph, level, edge and glitch errors are also recorded. Depending on the configuration, the module can be used as a modular **INspektor**® or repeater.

PA Diag+

PA Diag+

The **PA Diag+** module is able to monitor, analyse and display two PROFIBUS PA systems simultaneously. It analyses and evaluates both logical and physical parameters. This includes all known quality parameters that also apply to PROFIBUS DP networks.

DP Diag Master

DP Diag Master

The **DP Diag Master** extension offers controller-independent remote access based on the FDT/DTM standards in addition to analysing the connected PROFIBUS network. As a class 2 master, it can be used to parametrise and configure devices and modules via Ethernet.

Alarm module

Alarm module

With the alarm module, the **INBLOX**® system can be expanded by an alarm function that is activated by switching a potential-free contact. It is always wired as the last module and provides a separate switching contact as well as a digital reset input for each expansion module (max. 4). In addition, the statuses of the individual contacts are signalled with LEDs.

What is a repeater and what is it used for?

A repeater is an electronic component that receives incoming signals and forwards – repeats – them refreshed (see fig. 19). Because this process uses optocouplers in the repeater, two galvanically separate segments are created.

Repeaters are used to ensure trouble-free operation of a PROFIBUS network and fulfil the relevant standards. Per segment, a maximum of 32 devices can be used (including the repeater). The maximum line length is always considered per segment.

For creating a network with 32 devices or a very large networks, then the use of repeaters is necessary. They are also suitable for isolating anomalous devices or devices that are susceptible to faults.

RECOMMENDATION – Cable length

In PROFIBUS networks, the maximum transmission distance for the transmission speed has to be observed.

Transmission speed in kbps	Transmission distance in m
9,6	1200
19,2	1200
45,45	1200
93,75	1200
187,5	1000
500	400
1500	200
3000	100
6000	100
12000	100

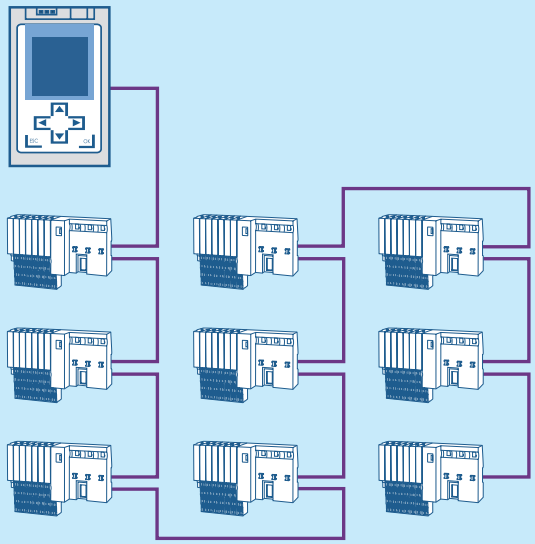

Fig. 18: Linear structure application example

Fig. 19: Signal refreshed by a repeater

RECOMMENDATION – star-shaped structure

The use of repeaters (**INBLOX**® or **MULTIrep**) enables the implementation of a key benefit of Ethernet-based networks into PROFIBUS: The star-shaped structure (see fig. 20). Every thread going out from a repeater is a galvanically independent segment with a refreshed signal. This permits the formation of groups by location, function or technology – the linear structure (see fig. 18) is dissolved. Small segments make the network structure easy to understand and simplify diagnostics.

MULTIrep® X2, X5, X7

Repeater product range MULTIrep (X2, X5, X7)

Star networks and telegram traffic

With the **MULTIrep** range of repeaters, the PROFIBUS network can be subdivided into two, five or seven galvanically independent segments. The star structure with multiple small segments and refreshed signals has many benefits in regard to stable operation and troubleshooting.

Bus:		Bus health by channel
	Green:	Okay
	Red:	Error telegram, repetition, diagnostic messages, device failures
Data:	**Green:**	Bus activity on the channel
	Red:	Configuration problem on the PB
	Off:	No bus activity present

The **MULTIrep** repeater continuously monitors the PROFIBUS telegram traffic and signals any detected logical or physical anomalies. The bus LED signals error telegrams and repetitions. The data LED shows whether a slave is communicating on the channel and whether it is configured without errors.

Highlights

- Enables stubs in PROFIBUS
- Isolates sensitive or problematic areas
- Expansions or shutdowns possible during running operation
- Errors affect only small parts of the network

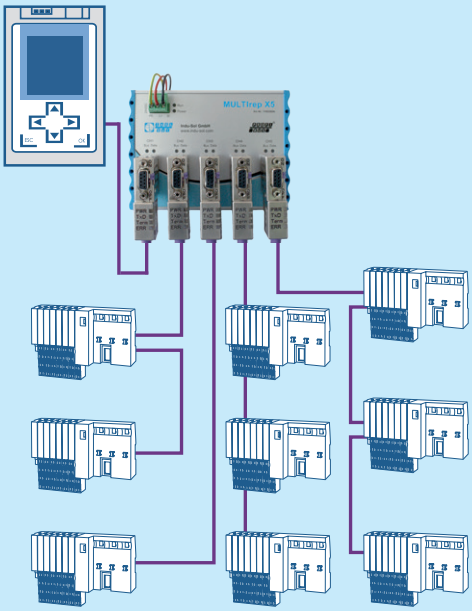
Fig. 20: Star network application example

MULTIrep X2

The use of repeaters enables the expansion of a PROFIBUS network to include a maximum of 126 devices, as well as longer cables for the same transmission speed. Per segment, a maximum of 32 devices are permitted. The **MULTIrep X2** repeater regenerates the voltage signal in both directions and amplifies it to the standard PROFIBUS level. The content of the signal remains unchanged. From a physical point of view, the use of this repeaters creates two galvanically separated segments.

MULTIrep X2 – 105 mm
72 mm

MULTIrep X5 und X7

With the multiple repeaters **X5** and **X7**, the **MULTIrep** range is the ideal basis for a robust PROFIBUS star network. The **MULTIrep** stands out by its simplicity and reduction to the essentials. The PROFIBUS wiring is implemented with proven, reliable SUB-D connectors. There are no error-prone DIP switches or terminal points on the device. The integrated diagnostic function is a highlight of the **MULTIrep** series. The telegram traffic is continuously monitored, and the health of each segment is indicated with LEDs.

MULTIrep X5 – 105 mm
142 mm

MULTIrep X7 – 105 mm
212 mm

Modular repeater – INBLOX®

INBLOX®

Basic Repeater

DP Basic Repeater

Today's industrial and production systems must be clearly structured and monitored to ensure reliable and trouble-free function. The **INBLOX®** Basic Repeater fulfils these requirements. In addition to the repeater function, the head module without higher intelligence enables simple diagnostics via LED. It can be used to implement five galvanically separate segments in a star network. With the **INBLOX® DP Diag Rep X1, X2** and **X4** expansions (description see page 20), the number of segments can be increased to 25.

Module versions

DP Diag Rep X1

DP Diag Rep X2

DP Diag Rep X4

Compact repeater REpeato

REpeato

REpeato

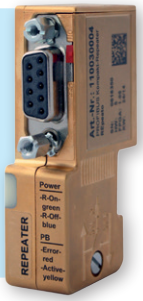

The **REpeato** compact repeater is the smallest PROFIBUS repeater on the market. Despite its small size, it is able to keep up with the "big boys". It regenerates the edge steepness and level of signal, thereby creating a new segment. It can be used with all transmission speeds. The **REpeato** is installed in the place of a connector either directly on a device or – better – on an installation block (PBMB). Its main area of application is the implementation of active stubs. Functions and operating statuses of the repeater are signalled with the integrated LEDs.

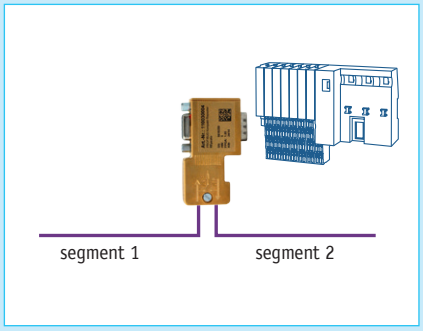

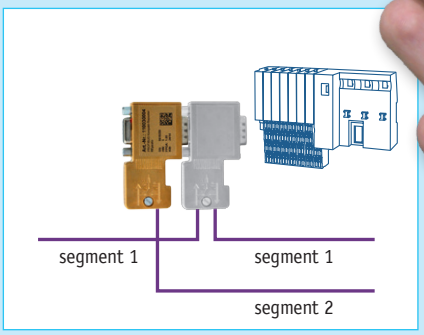

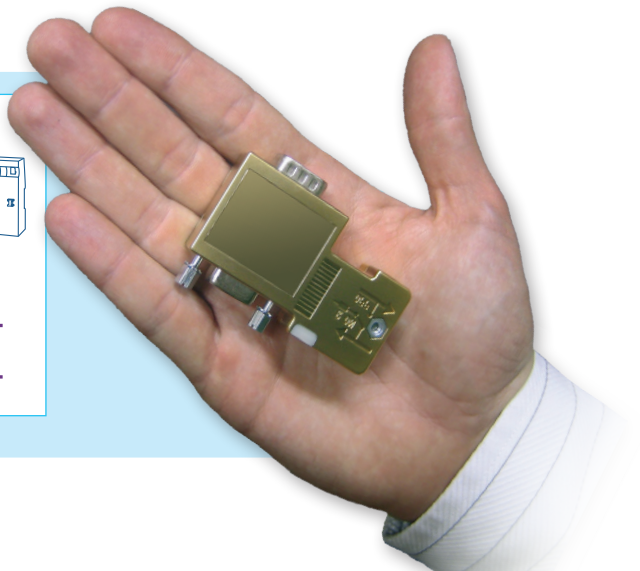

Fig. 21: REpeato application example

Consulting

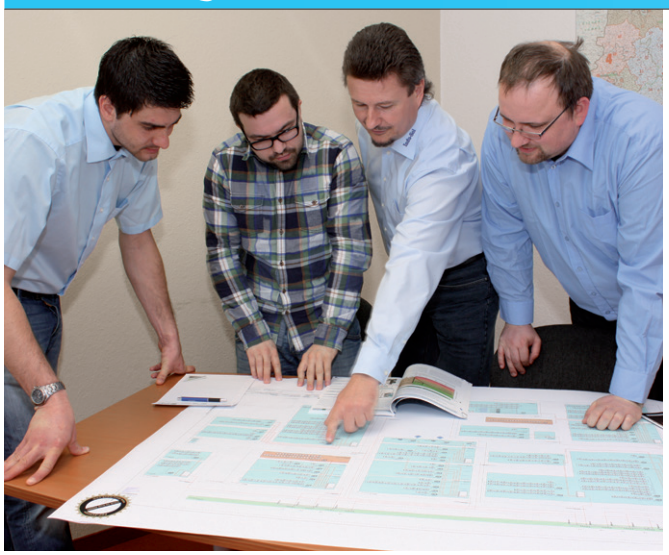

Services include:

Based on years of experience we offer expert consultation in all matters related to fieldbuses and industrial data communication at all stages from the concept to practical use. We support you during network planning, documentation and commissioning. This includes e.g. the drafting of delivery specifications or product requirement documents. Our service also includes assembly supervision and the final acceptance and certification of your network. We offer training for your operating personnel to familiarize employees with the network specifications of your system.
We will gladly visit you for a “round table” and demonstrate the opportunities offered by our permanent network monitoring.

Measurement

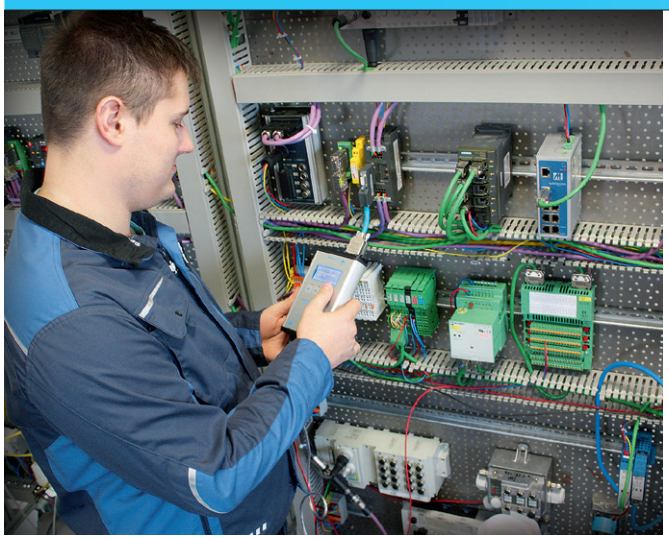

Services include:

- Measurement of communication quality and creation of a measurement report
- Acceptance and certification of systems according to standards and PI guidelines
- Commissioning support
- Emergency support for troubleshooting
- Close-to-bus EMC evaluation / evaluation of equipotential bonding quality
- WLAN measurement incl. site survey

Training

Services include:

- Planning / installation / service
- Fundamentals of Ethernet / PROFIBUS / WLAN / EMC
- Practical network know-how (cables, plugs, structure, address assignment, commissioning etc. ...)
- Measurement devices / principles / methods / diagnostic options
- Practice (installation, telegram exchange, PNM, strategies for troubleshooting, network security etc.)
- Certification of PROFIBUS installers

Measurement and diagnostic tools

PROFIBUS tester PB-Q^{ONE} (see page 6)

Quality tester

Ordering Details	Art. No.
PROFIBUS tester PB-Q^{ONE}	6110010050

Other accessories on request

PROFtest II XL (see page 7)

Cable tester

Ordering Details	Art. No.
PROFtest II XL	6110010005

Other versions and accessories on request

PROFIBUS-INspektor® NT (see page 10)

Analysis and diagnostic tool

Ordering Details	Art. No.
PROFIBUS-INspektor® NT	6124010020
PROFIBUS-INspektor® NT Starter kit	6124010021

PROFIBUS Diagnostic Set (see page 13)

All essential tools for commissioning and troubleshouting

- **PROFtest II XL** cable tester
- PROFIBUS tester **PB-Q^{ONE}**
- **EMCheck® LSMZ I** leakage current measuring clamp
- **PROFIBUS-INspektor® NT** analysis and diagnostic tool
- **APKA II** active programming cable II
- Patch cable
- Power supply

Ordering Details	Art. No.
PROFIBUS Diagnostic Set II (excl. INspektor® NT)	6110010009
PROFIBUS Diagnostic Set III	6110010020

Measuring points

PBMA IP20 (see page 9)

Active measuring point (incl. active adapter PBMB)

Ordering Details	Art. No.
PBMA IP20 (PBMB+Diagnostic connector Fast Connect)	6110080001
PBMA IP20 (PBMB+Diagnostic connector Screw terminal)	6110080003

iPBMA IP20 (see page 9)

Intelligent measuring point

Ordering Details	Art. No.
iPBMA IP20	6110080015

PBMS IP64 (see page 9)

Active measuring point

Ordering Details	Art. No.
PBMS-E IP64 black (Single)	6110080008
PBMS-D IP64 black (Double socket, German)	6110080009
PBMS-B IP64 black (Double socket, international)	6110080010
PBMF-PB connecting electronics (Retrofitting kit)	6110080007

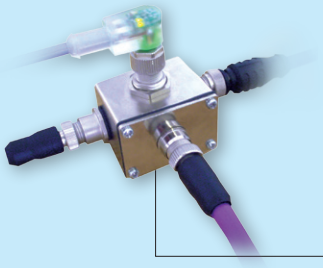

PBMX IP67 (see page 9)

Active measuring point

Ordering Details	Art. No.
PBMX IP67 (Single)	6110080004
PBMX IP67 (Set)	6110080005

PAMA IP20 (see page 9)

Passive measuring point

Ordering Details	Art. No.
PAMA IP20	6110080016

PAMA IP67 (see page 9)

Passive measuring point

Ordering Details	Art. No.
PAMA IP67	6110080011

Permanent network monitoring

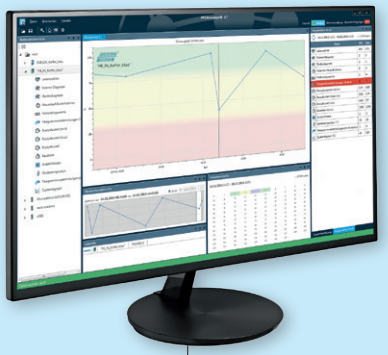

PROmanage® NT (see page 14)

Network monitoring software

*The licence defines the maximum number of network ports or devices retrieved simultaneously. (Ethernet switch: number of network ports = number of licence ports, 1 PB-INspektor® = 8 ports, 1 PN-INspektor® = 16 ports)

Ordering Details	Art. No.
PROmanage® NT (80 ports*)	6117000032
PROmanage® NT (320 ports*)	6117000034
PROmanage® NT (640 ports*)	6117000036

INBLOX® Ethernet head module (see page 18)

E-head (Modular INspektor®)

Ordering Details	Art. No.
INBLOX® Ethernet head module	6124060000

INBLOX® DP Diag Rep X1 (see page 20)

Extension module

Ordering Details	Art. No.
INBLOX® DP Diag Rep X1	6124060013

INBLOX® DP Diag Rep X2 (see page 20)

Extension module

Ordering Details	Art. No.
INBLOX® DP Diag Rep X2	6124060012

INBLOX® DP Diag Rep X4 (see page 20)

Extension module

Ordering Details	Art. No.
INBLOX® DP Diag Rep X4	6124060009

INBLOX® DP Diag+ Rep (see page 21)

Extension module

Ordering Details	Art. No.
INBLOX® DP Diag+ Rep	6124060010

INBLOX® PA Diag+ (see page 21)

Extension module

Ordering Details	Art. No.
INBLOX® PA Diag+	6124060001

INBLOX® DP Diag Master (see page 21)

Extension module

Ordering Details	Art. No.
INBLOX® DP Diag Master (FDT/DTM module)	6124060003

INBLOX® Alarm module (see page 21)

Alarm extension module

Ordering Details	Art. No.
INBLOX® Alarm module	6124060006

Repeater

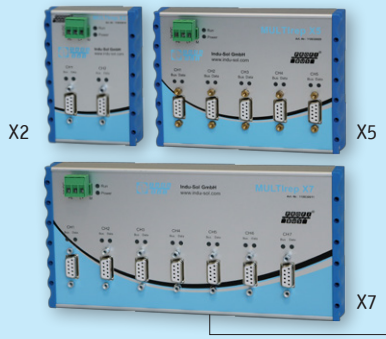

MULTIrep X2, X5, X7 (see page 23)

Multiple repeater

Ordering Details	Art. No.
MULTIrep X2	6110030010
MULTIrep X5	6110030009
MULTIrep X7	6110030011

INBLOX® DP Basic Rep (see page 24)

Head module (Modular Repeater)

Ordering Details	Art. No.
INBLOX® DP Basic Rep	6124060007
Extension module INBLOX® Diag Rep X1	6124060013
Extension module INBLOX® Diag Rep X2	6124060012
Extension module INBLOX® Diag Rep X4	6124060009

REpeato (see page 24)

Compact repeater

Ordering Details	Art. No.
REpeato	6110030004

EMC analysis | EMC diagnosis | EMC measurement

EMCheck® LSMZ I (see page 13)

Leakage current measuring clamp

Ordering Details	Art. No.
EMCheck® LSMZ I	6122010005
Set of measuring clamps (LSMZ I and MWMZ II)	6122010006

EMCheck® MWMZ II (see page 13)

Mesh resistence measuring clamp

Ordering Details	Art. No.
EMCheck® MWMZ II	6122010010
Set of measuring clamps (LSMZ I and MWMZ II)	6122010006

PROFIBUS cables

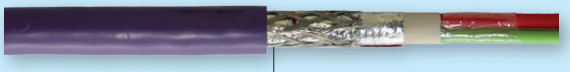

PROFIBUS cable massive

Ordering Details	Art. No.
PROFIBUS cable massive (standard)	6110070000

PROFIBUS cable flexible

Ordering Details	Art. No.
PROFIBUS cable flexible	6110070001

PROFIBUS cable drag chain capable

Ordering Details	Art. No.
PROFIBUS cable drag chain capable	6110070002

PROFIBUS cable +FE massive

Ordering Details	Art. No.
PROFIBUS cable +FE massive	6110070017

PROFIBUS cable +FE flexible

Ordering Details	Art. No.
PROFIBUS cable +FE flexible	6110070018

PROFIBUS tools and accessoires

PROFIBUS Fast Connect Stripping Tool

Ordering Details	Art. No.
PROFIBUS Fast Connect Stripping Tool	6110020032

EMFlex Stripping Tool

Ordering Details	Art. No.
EMFlex Stripping Tool	6122130010

MoSt II – Mobile power supply unit

Ordering Details	Art. No.
MoSt II complete set	6110020035
MoSt II power station	6110020036
MoSt II bag	6110020037
MoSt II connection cable	6110020038

PROFIBUS Connectors

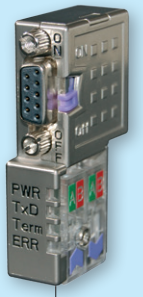

Diagnostic connector PG/90°

Connection: **Fast Connect**

Ordering Details	Art. No.
Diagnostic connector PG/90°	6110050006

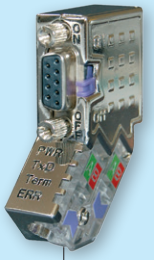

Diagnostic connector PG/45°

Connection: **Fast Connect**

Ordering Details	Art. No.
Diagnostic connector PG/45°	6110050007

Diagnostic connector axial

Connection: **Fast Connect**

Ordering Details	Art. No.
Diagnostic connector axial	6110050008

Connector PG/90°

Connection: **Fast Connect**

Ordering Details	Art. No.
Connector PG/90°	6110050010

Round plug connector self-made-up

Connection: **M12 Fast Connect Plug PRO (b-coded)**

Ordering Details	Art. No.
1 Round plug connector self-made-up	6110050024
2 Round plug connector self-made-up	6110050025

Diagnostic connector PG/90°

Connection: **Screw terminal**

Ordering Details	Art. No.
Diagnostic connector PG/90°	6110050009

Connector PG/90°

Connection: **Screw terminal**

Ordering Details	Art. No.
Connector PG/90°	6110050002

Connector PG/35°

Connection: **Screw terminal**

Ordering Details	Art. No.
Connector PG/35°	6110050004

Connector axial

Connection: **Screw terminal**

Ordering Details	Art. No.
Connector axial	6110050005

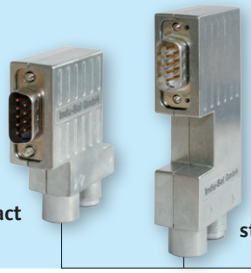

Connector PG/90° (compact + standard)

Connection: **M12**

Ordering Details	Art. No.
Connector PG/90° compact	6110050016
Connector PG/90° standard	6110050017

Services (measurement / training)

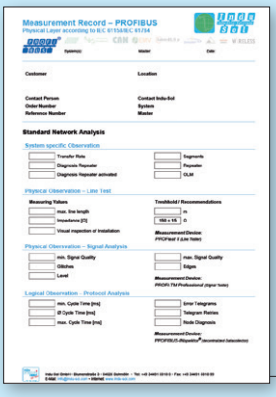

Measurement / Troubleshooting (see page 25)

Network analysis / Certification, Troubleshooting

Ordering Details	Art. No.
Network analysis / Certification	6210010000
Troubleshooting	6210010001

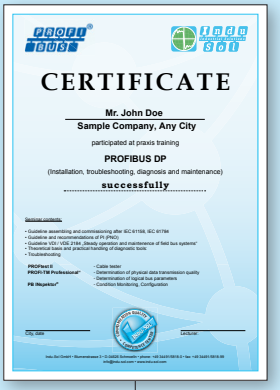

Training (see page 25)

PROFIBUS user training (2 days), advanced training (1 day)

Ordering Details	Art. No.
PROFIBUS user training (2 days-Schmoelln)*	6220010011
PROFIBUS advanced training (1 day-Schmoelln)*	6220010020

Training (see page 25)

PROFIBUS user training (**PI certified** incl. test) (3 days/1 day)

Ordering Details	Art. No.
Certified PROFIBUS Installer (3 days-Schmoelln)*	6220010014
Certified PROFIBUS Installer (1 day-Schmoelln)* **Expansion module** (please call for prerequisites to attend)	6220010018

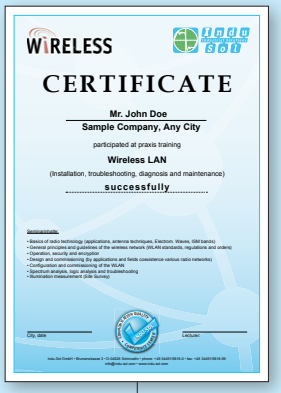

Training (see page 25)

WLAN training (2 days)

Ordering Details	Art. No.
WLAN training (2 days-Schmoelln)*	6220080001

*On-site training at your premises on request.

Notes

Prokorment
Waterloop 3
2614 XC Delft
Nederland

Telefoon: +31 (0) 15 2121310
info@prokorment.nl
www.prokorment.nl

Indu-Sol is certified according
to DIN EN ISO 9001:2008

Updated 03/2018